THE INFORMATION CONTAINED IN THIS DRAWING IS THE SOLE PROPERTY OF U.S. FOUNDRY & MANUFACTURING CORP. ANY REPRODUCTION IN PART OR AS A WHOLE WITHOUT THE WRITTEN PERMISSION OF U.S. FOUNDRY & MANUFACTURING CORP. IS PROHIBITED. U.S. FOUNDRY & MANUFACTURING CORP. RESERVES THE RIGHT TO MAKE MODIFICATIONS TO DESIGN WITHOUT PRIOR NOTICE. DRAWING IS UNCONTROLLED WHEN PRINTED. WEIGHTS AND DIMENSIONS ARE PROVIDED FOR REFERENCE ONLY **© 2014 US FOUNDRY AN EAGLE MANUFACTURING COMPANY**

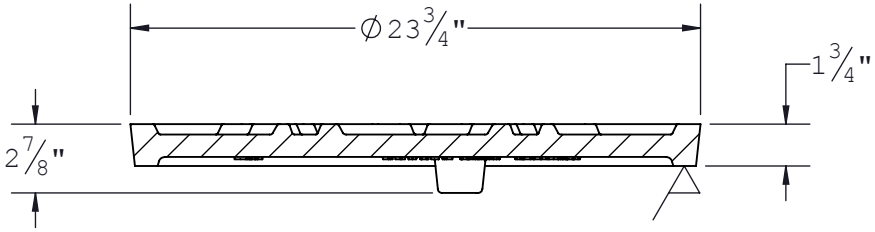

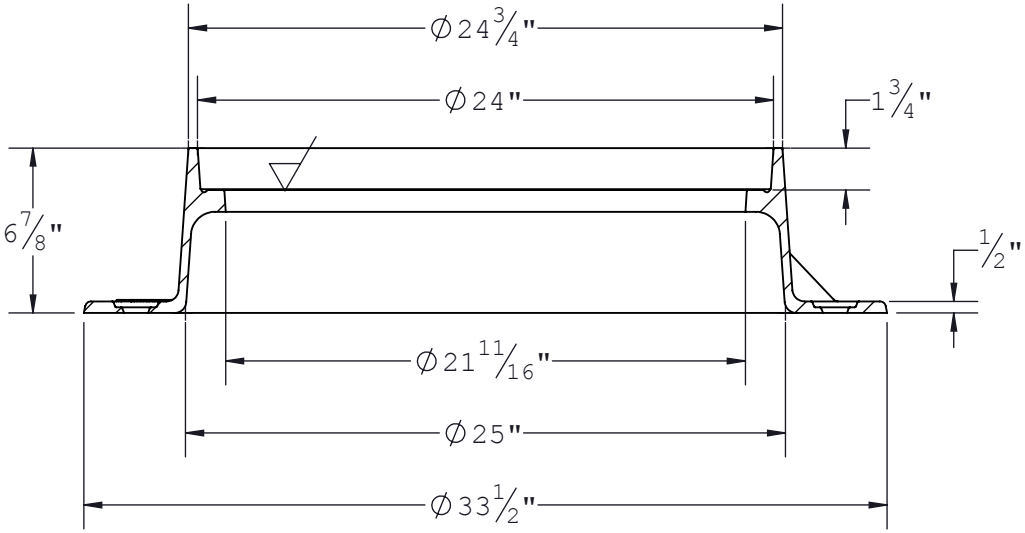

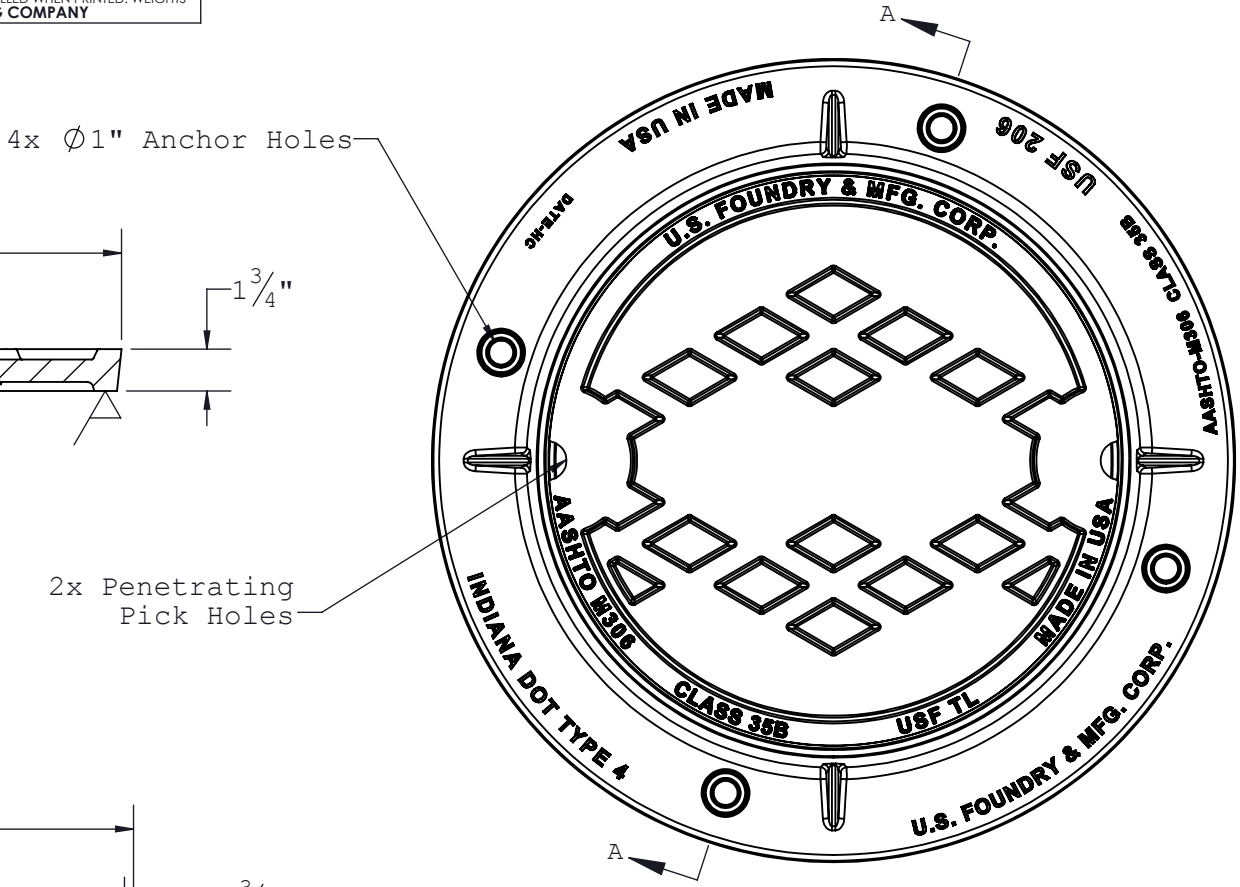

US FOUNDRY
AN EAGLE MANUFACTURING COMPANY
8351 NW 93rd Street
Medley, FL, 33166-2025
ph: 1-800-432-9709
fax: 305-887-9429
www.usfoundry.com
© 2014 All Rights Reserved

USF 206 Ring & TL Cover

LOAD CLASSIFICATION:	Heavy Duty	
MATERIAL:	Gray Cast Iron ASTM-A48 Class 35B	
ITEM: Ring	BAAN # 8021598	DRAWING
		DATE 02/25/2015
		DRAWN BY ULS/AB

REV	DATE	REV BY	QUOTE #
0			

Customer Drawing