THE INFORMATION CONTAINED IN THIS DRAWING IS THE SOLE PROPERTY OF U.S. FOUNDRY & MFG CORP. ANY REPRODUCTION IN PART OR AS A WHOLE WITHOUT THE WRITTEN PERMISSION OF U.S. FOUNDRY & MFG CORP. IS PROHIBITED. U.S. FOUNDRY & MFG CORP. RESERVES THE RIGHT TO MAKE MODIFICATIONS TO DESIGN WITHOUT PRIOR NOTICE. DRAWING IS UNCONTROLLED WHEN PRINTED. UNLESS OTHERWISE NOTED WEIGHT IS IN POUNDS & APPROXIMATE (Ñ5%). DO NOT SCALE WEIGHTS AND DIMENSIONS ARE PROVIDED FOR REFERENCE ONLY. 8351 NW 93RD ST, MEDLEY, FL 33166. PHONE: 1-800-432-9709. FAX: 305-887-9429. WWW.USFOUNDRY.COM - AN EAGLE MANUFACTURING COMPANY É 2018 U.S. FOUNDRY AN EAGLE MANUFACTURING COMPANY

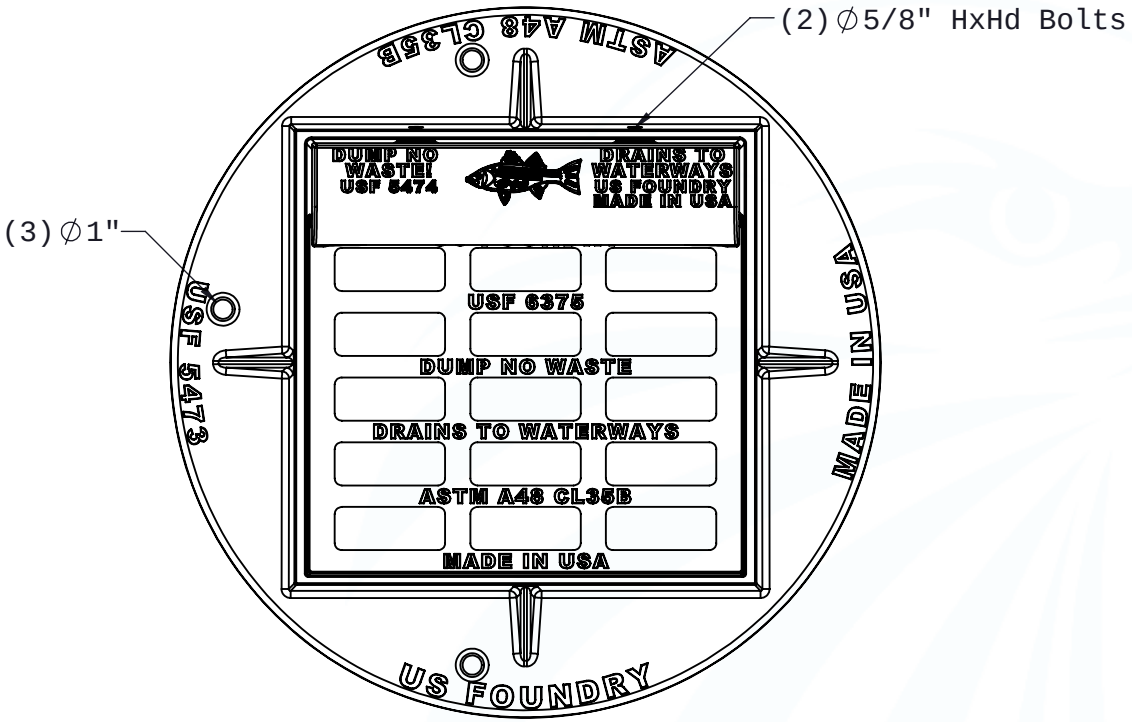


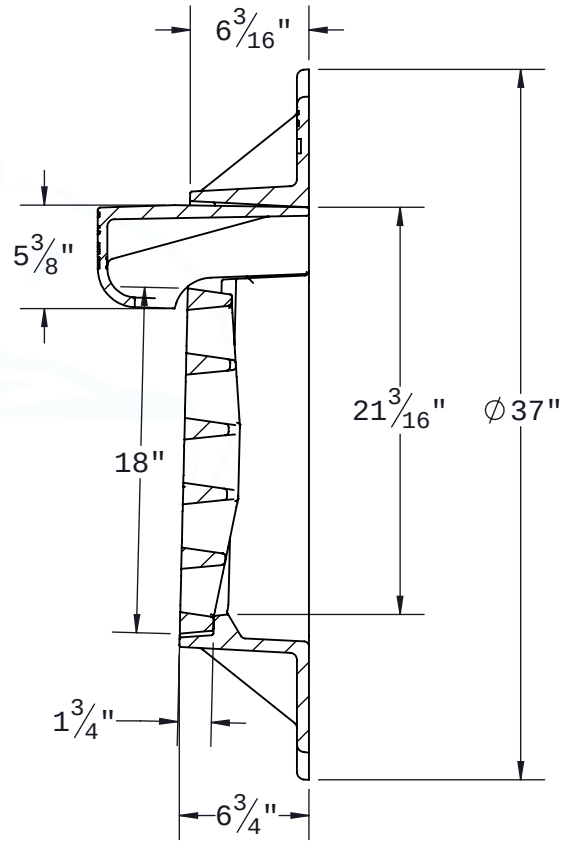


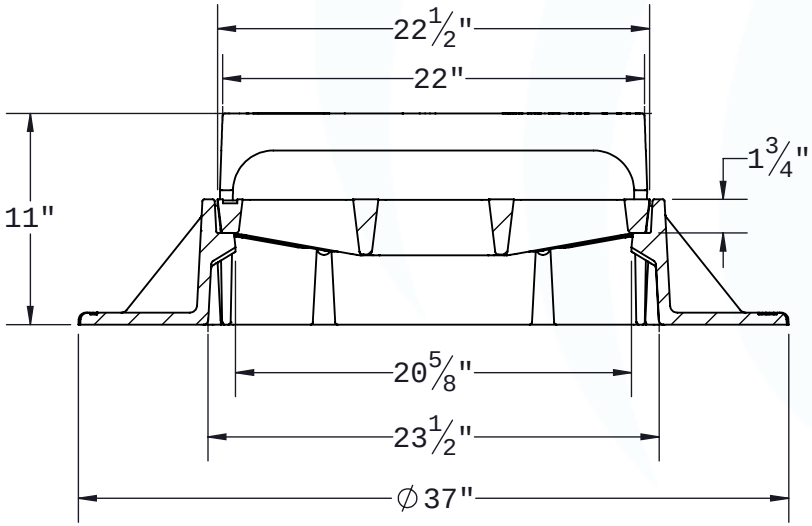


US FOUNDRY
AN EAGLE MANUFACTURING COMPANY
8351 NW 93rd Street
Medley, FL, 33166-2025
ph: 1-800-432-9709
fax: 305-887-9429
www.usfoundry.com
É 2018 All Rights Reserved

# USF 5475 Fr&Hd & 6375 Gr

| ITEM | BAAN # |
|---|---|
| Frame | 8030597 |
| Grate | 8077212 |
| Hood | 8060162 |
| Assembly | 8050309 |

MATERIAL: Gray Cast Iron ASTM-A48 Class 35B

LOAD CLASSIFICATION: Heavy Duty

FLOW AREA: 195 in²

| REV | REV DATE | REV BY | DRAWN DATE | DRAWN BY | QUOTE # |
|---|---|---|---|---|---|
| 0 | | | 11/16/2017 | AB | |

Customer Drawing