THE INFORMATION CONTAINED IN THIS DRAWING IS THE SOLE PROPERTY OF U.S. FOUNDRY & MANUFACTURING CORP. ANY REPRODUCTION IN PART OR AS A WHOLE WITHOUT THE WRITTEN PERMISSION OF U.S. FOUNDRY & MANUFACTURING CORP. IS PROHIBITED. U.S. FOUNDRY & MANUFACTURING CORP. RESERVES THE RIGHT TO MAKE MODIFICATIONS TO DESIGN WITHOUT PRIOR NOTICE. DRAWING IS UNCONTROLLED WHEN PRINTED. WEIGHTS AND DIMENSIONS ARE PROVIDED FOR REFERENCE ONLY **© 2014 US FOUNDRY AN EAGLE MANUFACTURING COMPANY**

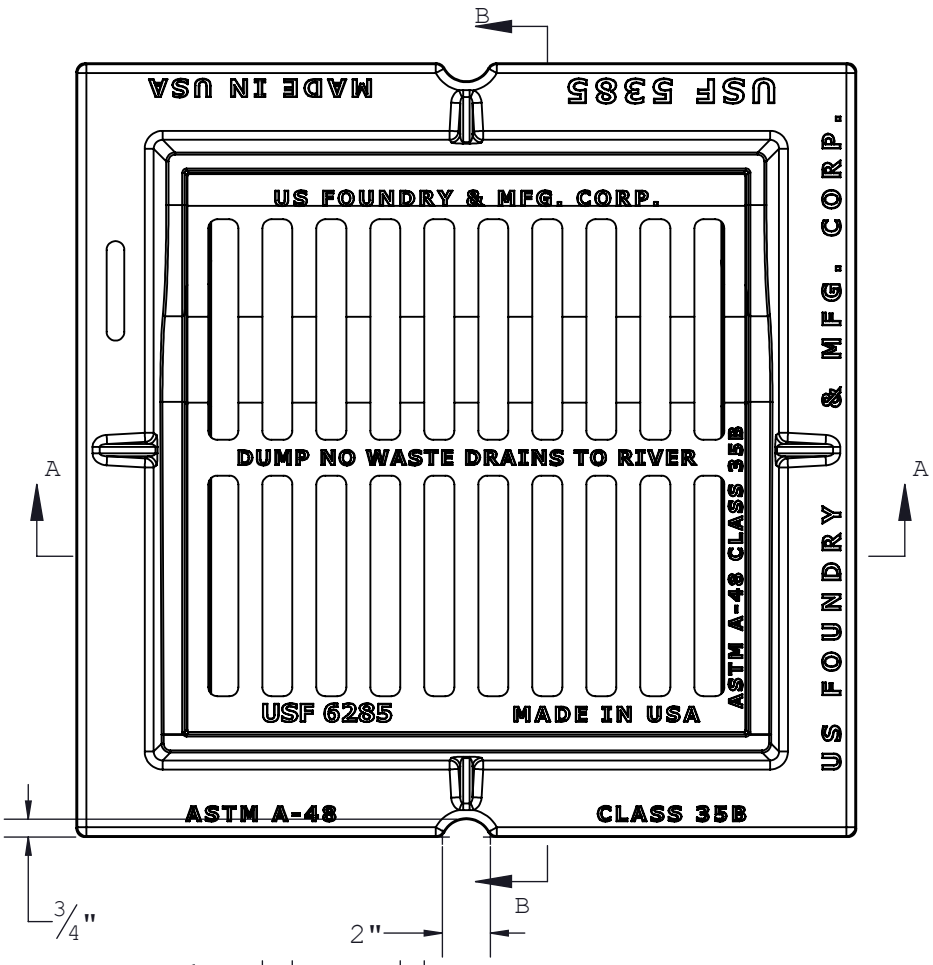

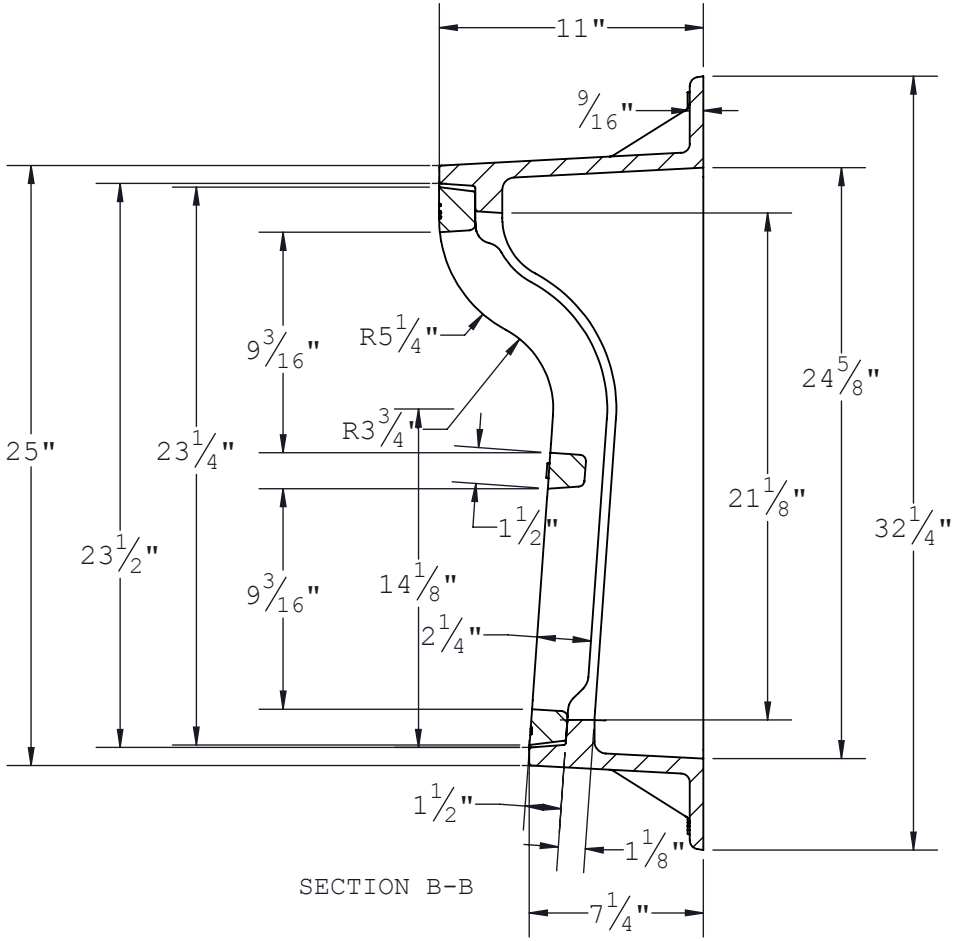

SECTION B-B

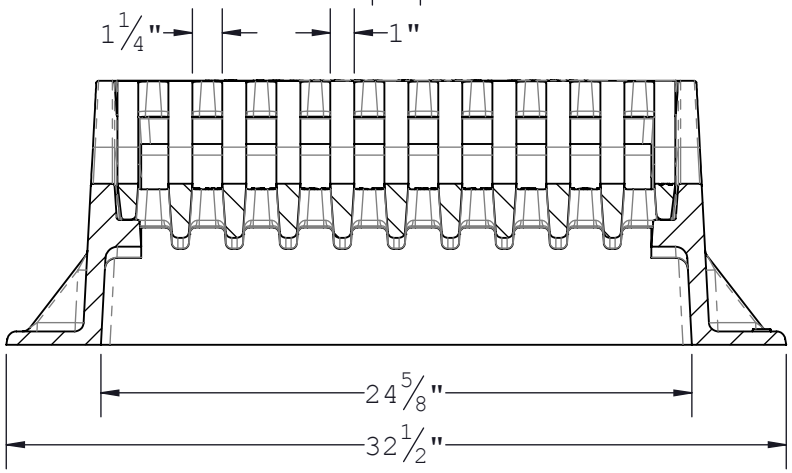

SECTION A-A

US FOUNDRY
AN EAGLE MANUFACTURING COMPANY
8351 NW 93rd Street
Medley, FL, 33166-2025
ph: 1-800-432-9709
fax: 305-887-9429
www.usfoundry.com
© 2014 All Rights Reserved

USF 5385 Frame & 6285 Grate

LOAD CLASSIFICATION:	Heavy Duty	FLOW AREA:	252 in²
MATERIAL:	Gray Cast Iron ASTM-A48 Class 35B		
ITEM:	BAAN #	DRAWING	USF 5385-6285
Frame	8030466		
Grate	8076889	DATE	11-28-12
		DRAWN BY	OD
Assembly	8040407		

REV	DATE	REV BY	QUOTE #
0			3702

Customer Drawing