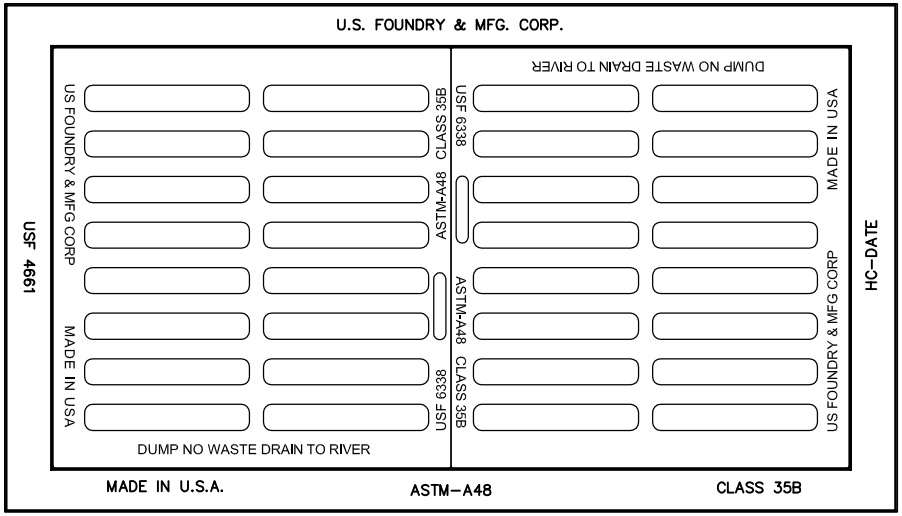

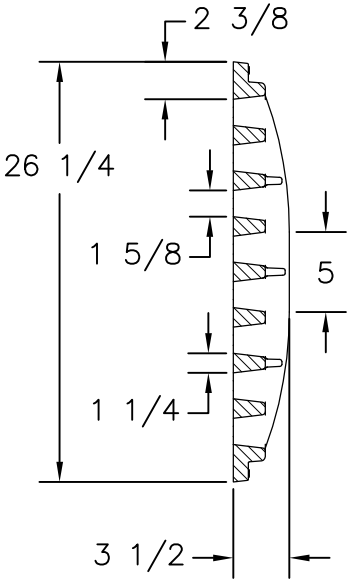

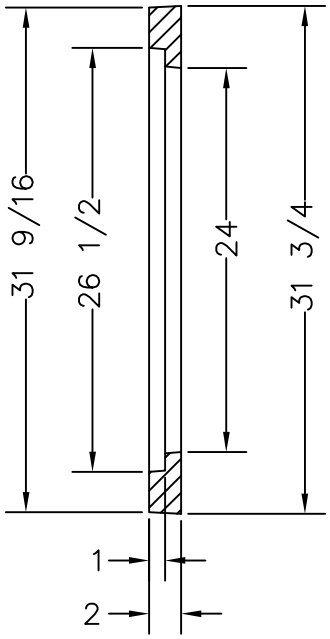

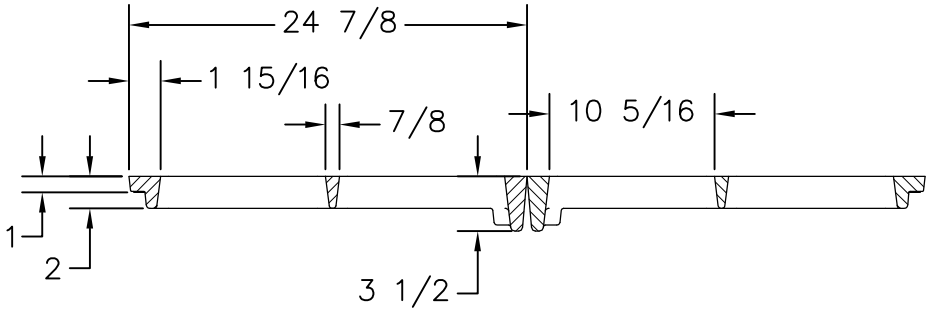

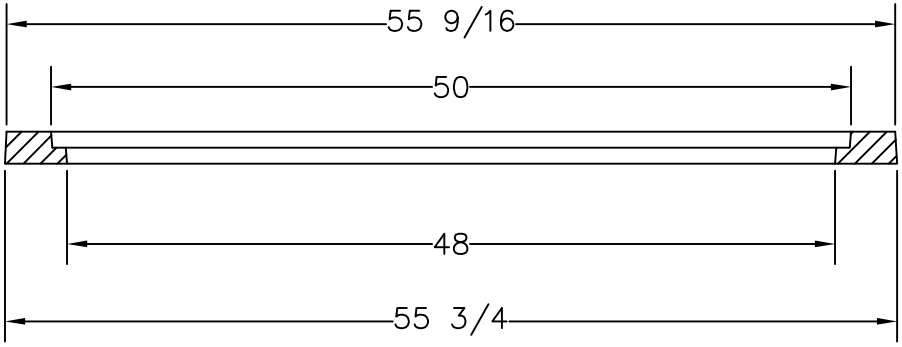

US FOUNDRY & MFG. CORP.
8351 NW 93rd Street, Medley, FL 33166-2025
ph: 1-800-432-9709; fax: 305-887-9429
www.usfoundry.com
© 2010 US Foundry & Mfg. Corp. All Rights Reserved

USF 4661 Frame & 6339 Grate

TN DOT#11; (USF6339=USF6338 [8070487]x2)

LOAD CLASSIFICATION: Heavy Duty				FLOW AREA=529.4in²
MATERIAL: ASTM-A48 GRAY IRON CLASS35B				
Frame No:	8030229	WGHT:	272	SCALE: 1"=1"
Grate No:	8070465		312	DATE: 9-5-06
				DWN. BY: ULS
Assembly No:	8040208		584	
UNLESS OTHERWISE NOTED WEIGHT IS IN POUNDS AND APPROXIMATED				
REV: 2	DATE: 5-11-11	REV BY: OD		QUOTE# 1868,1869