THE INFORMATION CONTAINED IN THIS DRAWING IS THE SOLE PROPERTY OF U.S. FOUNDRY & MFG CORP. ANY REPRODUCTION IN PART OR AS A WHOLE WITHOUT THE WRITTEN PERMISSION OF U.S. FOUNDRY & MFG CORP. IS PROHIBITED. U.S. FOUNDRY & MFG CORP. RESERVES THE RIGHT TO MAKE MODIFICATIONS TO DESIGN WITHOUT PRIOR NOTICE. DRAWING IS UNCONTROLLED WHEN PRINTED. UNLESS OTHERWISE NOTED WEIGHT IS IN POUNDS & APPROXIMATE (Ñ5%). DO NOT SCALE WEIGHTS AND DIMENSIONS ARE PROVIDED FOR REFERENCE ONLY. 8351 NW 93RD ST, MEDLEY, FL 33166. PHONE: 1-800-432-9709. FAX: 305-887-9429. WWW.USFOUNDRY.COM - AN EAGLE MANUFACTURING COMPANY **É 2018 U.S. FOUNDRY AN EAGLE MANUFACTURING COMPANY**

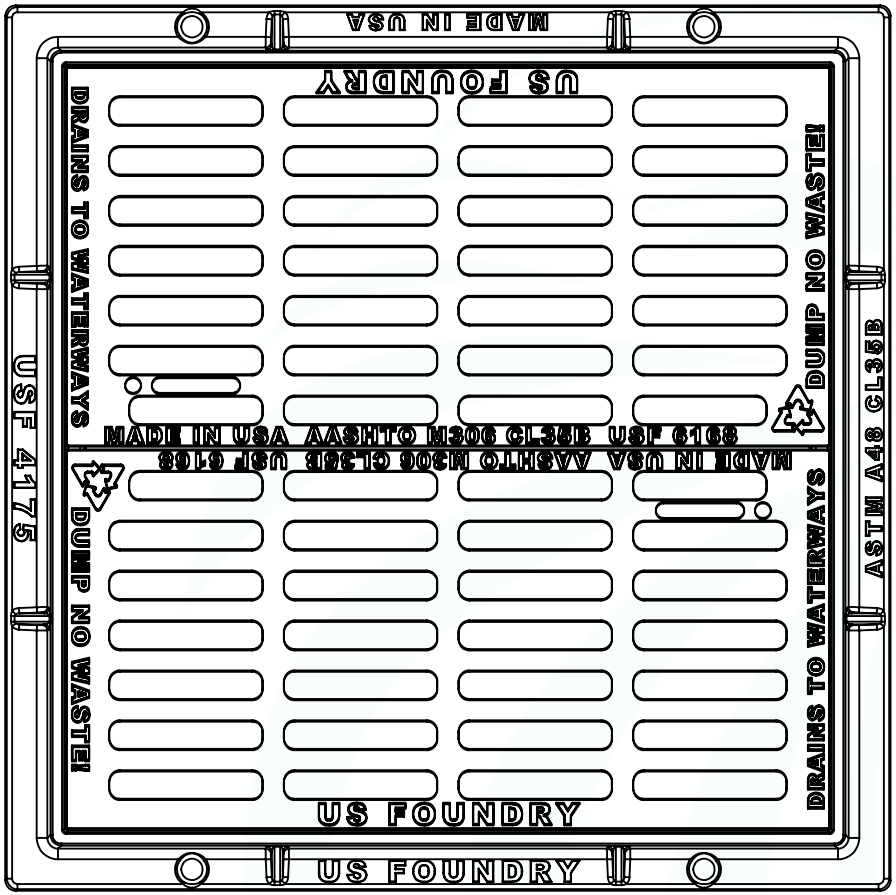

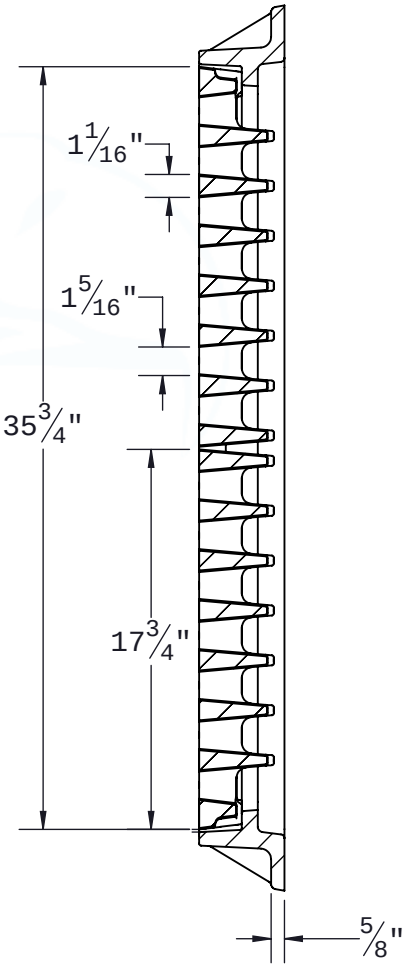

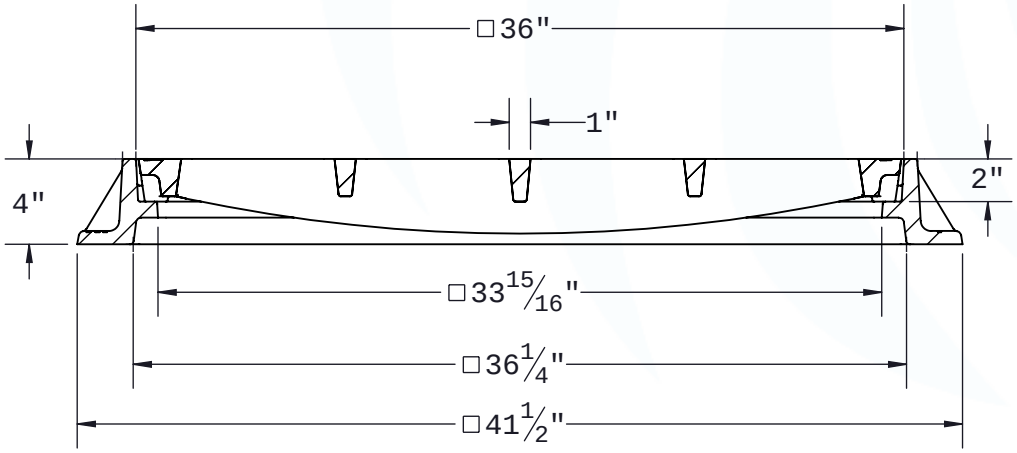

US FOUNDRY
AN EAGLE MANUFACTURING COMPANY
8351 NW 93rd Street
Medley, FL, 33166-2025
ph: 1-800-432-9709
fax: 305-887-9429
www.usfoundry.com
É 2018 All Rights Reserved

USF 4175 Frame & 6168-D Grate

ITEM	BAAN #
Frame	8030040
Grate	8070084
Assembly	8040064

MATERIAL: Gray Cast Iron ASTM-A48 Class 35B

LOAD CLASSIFICATION: Heavy Duty

FLOW AREA: 522 in²

REV	REV DATE	REV BY	DRAWN DATE	DRAWN BY	QUOTE #
0			04/12/1989	EW/AB	

Customer Drawing