THE INFORMATION CONTAINED IN THIS DRAWING IS THE SOLE PROPERTY OF U.S. FOUNDRY & MANUFACTURING CORP. ANY REPRODUCTION IN PART OR AS A WHOLE WITHOUT THE WRITTEN PERMISSION OF U.S. FOUNDRY & MANUFACTURING CORP. IS PROHIBITED. U.S. FOUNDRY & MANUFACTURING CORP. RESERVES THE RIGHT TO MAKE MODIFICATIONS TO DESIGN WITHOUT PRIOR NOTICE. DRAWING IS UNCONTROLLED WHEN PRINTED. WEIGHTS AND DIMENSIONS ARE PROVIDED FOR REFERENCE ONLY **É 2015 US FOUNDRY AN EAGLE MANUFACTURING COMPANY**

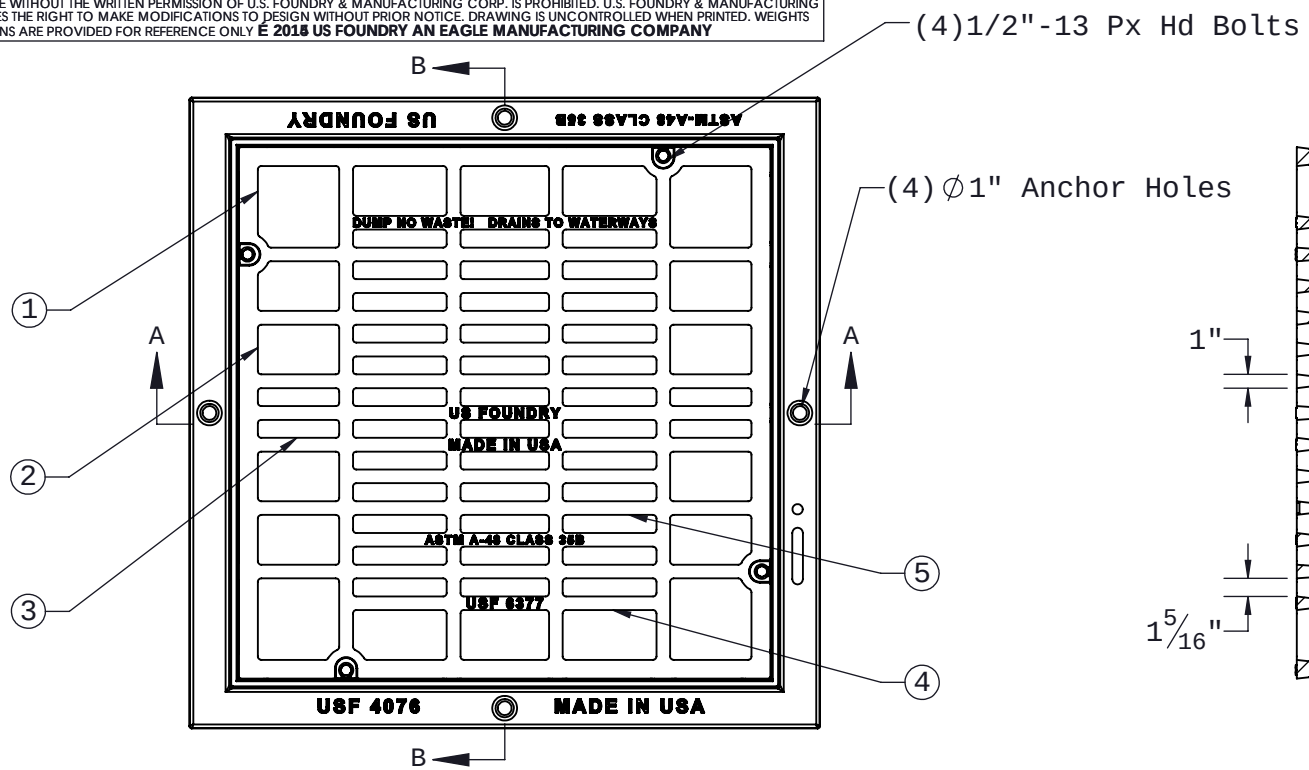

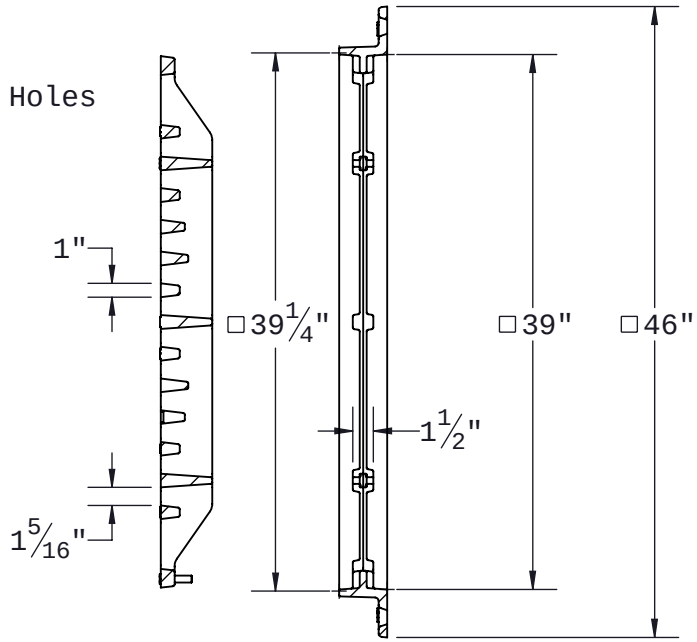

SECTION B-B

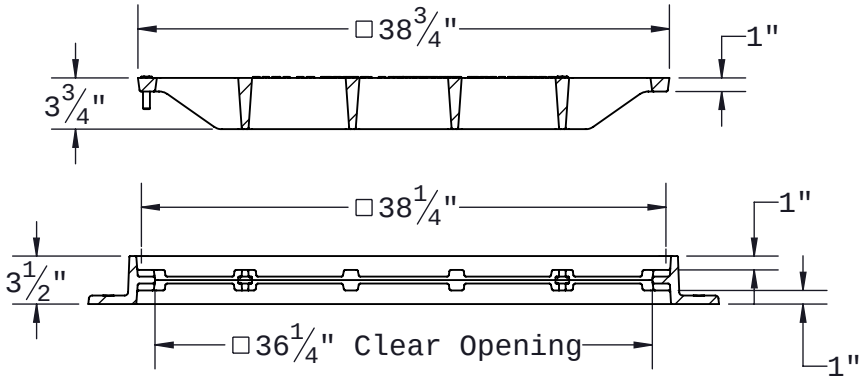

SECTION A-A

Pocket #	Qty.of Pockets	Pocket Dimension
1	4	5 15/16" x 5 15/16"
2	8	5 15/16" x 3 5/8"
3	4	5 15/16" x 1 5/16"
4	6	6 7/16" x 3 5/8"
5	36	6 7/16" x 1 5/16"

US FOUNDRY
AN EAGLE MANUFACTURING COMPANY
8351 NW 93rd Street
Medley, FL, 33166-2025
ph: 1-800-432-9709
fax: 305-887-9429
www.usfoundry.com
É 2015 All Rights Reserved

USF 4076 Frame & 6377 Grate

LOAD RATING:	AASHTO-M-306-10 Heavy Duty	FLOW AREA:	797 in²
MATERIAL:	Gray Cast Iron	ASTM-A48 CLASS 35B	
ITEM:	BAAN #	DRAWING	
Frame	8030534		
Grate		DATE	5/16/2015
		DRAWN BY	AB
REV 0	DATE	REV BY	QUOTE #

Customer Drawing